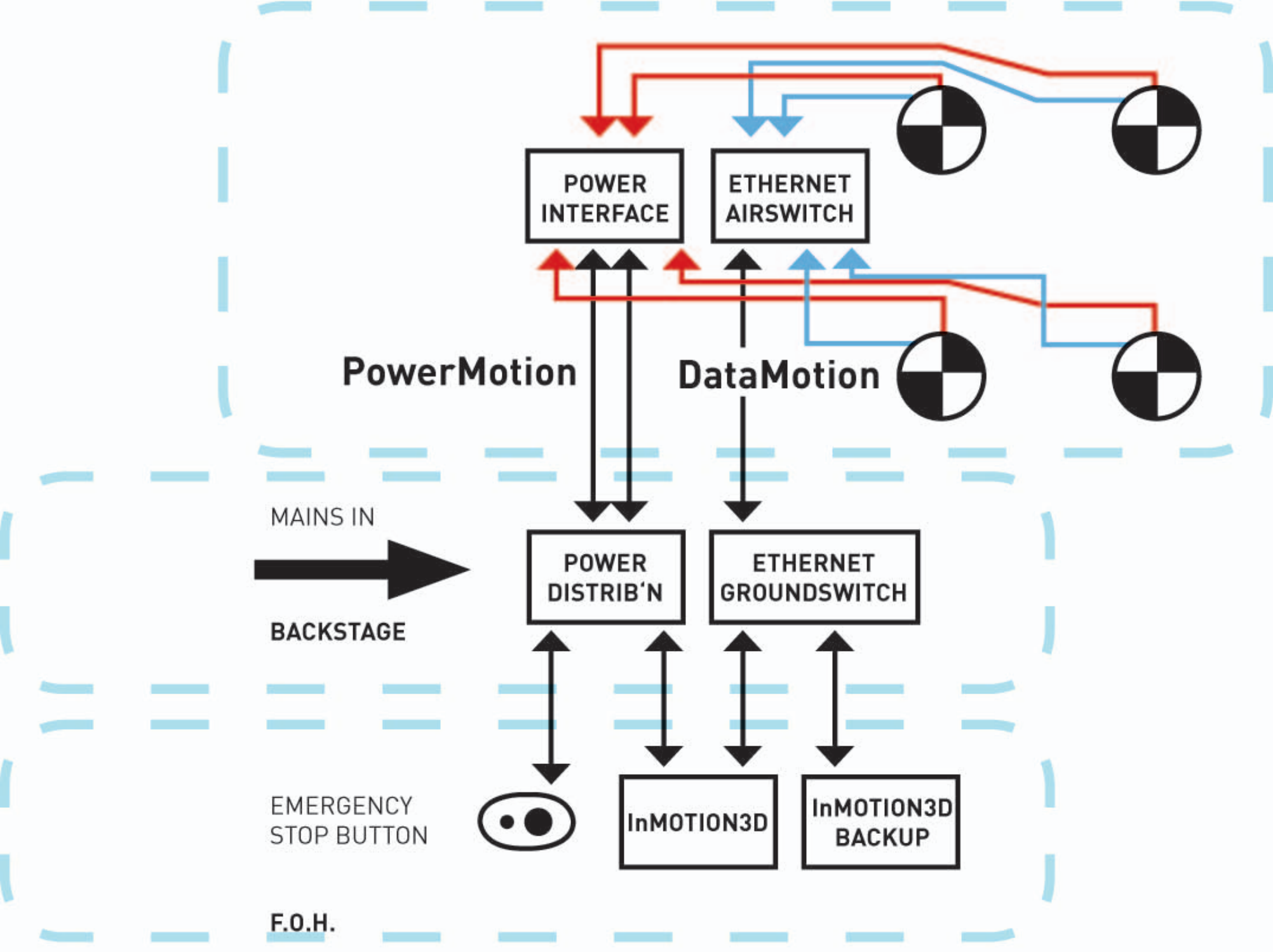
POWER INTERFACE
ETHERNET AIRSWITCH
PowerMotion
DataMotion
MAINS IN
BACKSTAGE
POWER DISTRIB'N
ETHERNET GROUNDSWITCH
EMERGENCY STOP BUTTON
InMOTION3D
InMOTION3D BACKUP
F.O.H.